Network Tap Implementation

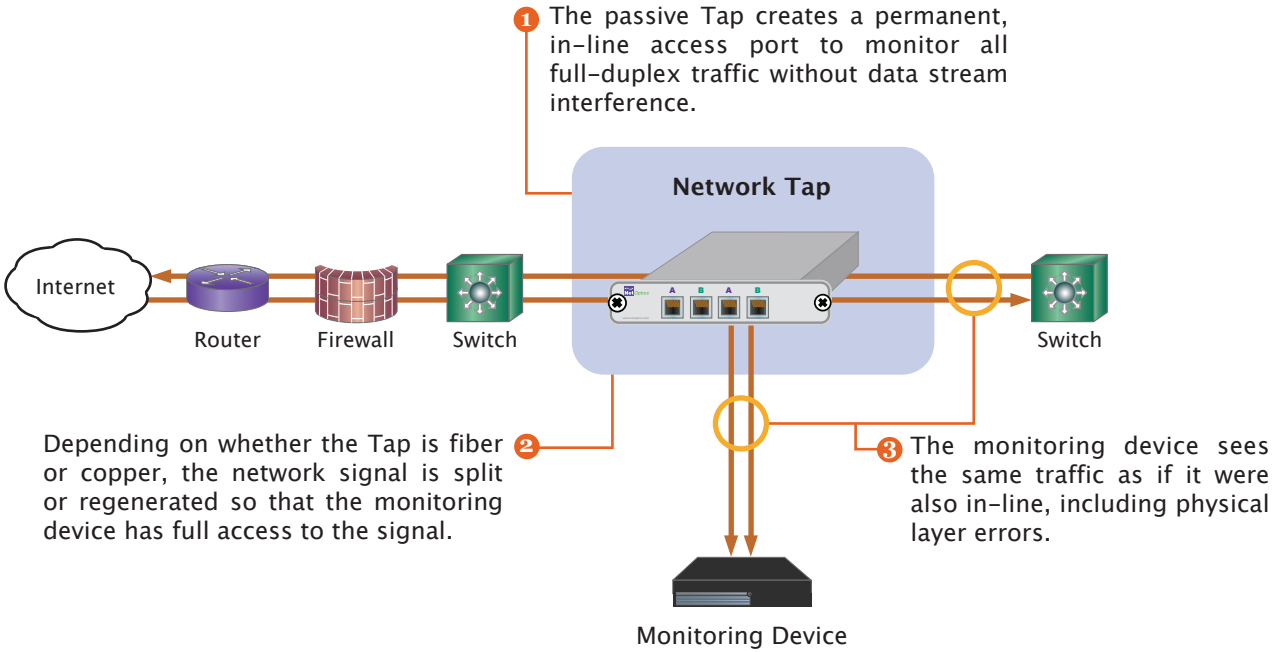

Copyright © 1996-2006 Net Optics, Inc.