GigaBit SX to TX Tap Implementation

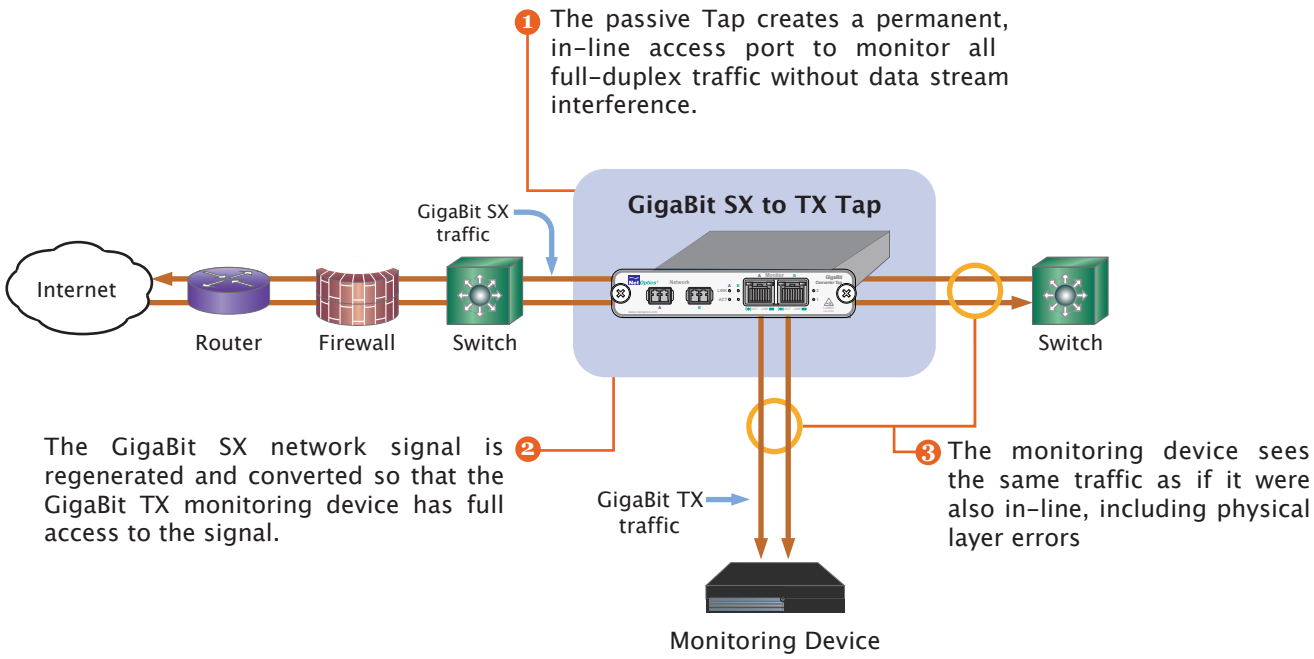

Copyright © 1996-2007 Net Optics, Inc.